CHAPTER IV.

The Prussian Semaphore Telegraph—The English Semaphore—The Gonon, Chappé, Guyot, and Treutler's Improvements on the Chappé Telegraph.

THE PRUSSIAN SEMAPHORE TELEGRAPH.

Fig. 1.

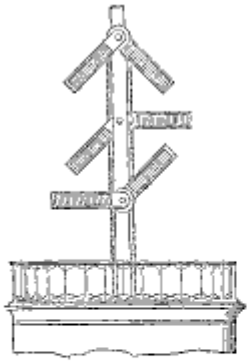

THE Prussian telegraph, represented by fig. 1, was introduced into Prussia in the year 1832, when the government appropriated 170,000 thalers for the establishment of a line of stations between Berlin and Trèves, passing through Potsdam, Magdeburg, Cologne, and Coblentz. The mechanism of the apparatus differs essentally from that of the Chappé. A vertical post traverses the platform of the station, and rises to the height of 20 feet. The post bears three pairs or couples of wings moveable around their extremities. The wings are 4 feet long, and 1¼ feet wide. Each wing is fixed to a pulley, over which passes a cord. This cord, in the room of the station-master, passes around a second pulley, to which a handle is attached. The rotation of the handle causes each wing to describe a semi-circle; but only four of these positions are used, those which the wing forms with the vertical angles 0°, 45°, 90°, and 135°. While one of the upper wings remains in the same position, the second wing may take four different positions, so that each pair of wings furnishes 16 signals. One of these signals being given, the second or middle pair of wings may, in their turn, take 16 relatively different positions, and consequently the first two wings give together $16 \times 16 = 256$ signals. This product multiplied by the sixteen signals of the third pair, gives a total of 4.096. Such is the number of signals at command by the Prussian telegraph.

The Prussian telegraph was perfected and extended over the kingdom with a degree of enterprise highly commendable to the nation. Experts were called into the service, and nowhere could be found a system more admirably conducted. Wherever improvements could be made, they were promptly adopted, and, at an early day after the establishment of the semaphore in Prussia, it was materially simplified.

THE ENGLISH SEMAPHORE TELEGRAPH.

Fig. 2.

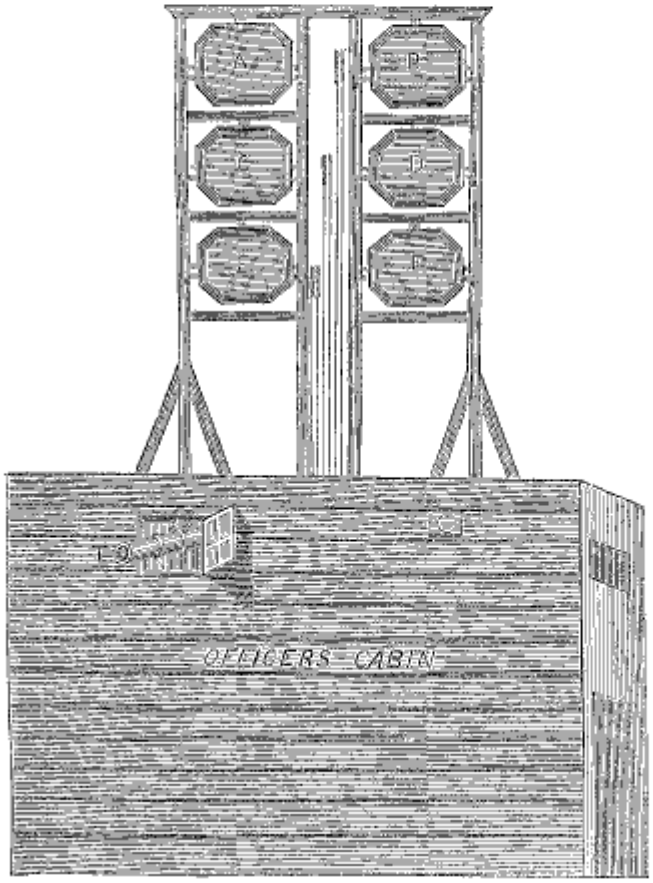

English Telegraph Station.

Fig. 3.

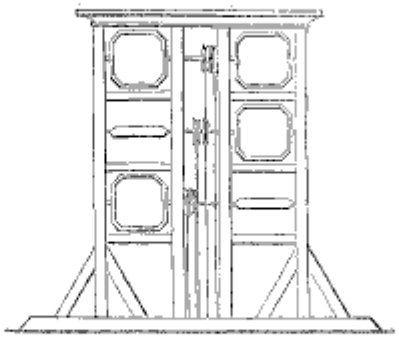

The English telegraph is represented in fig. 2. It consists of a quadrangular frame, in which six octagonal plates or panels turn around a horizontal axis. These six panels are divided into two groups, each formed of three plates, placed vertically above each other. A simple mechanism of pulleys and cranks enables the operator to exhibit each pan-

nel either its face or edge, and as each panel takes two different positions the whole will give 64 very distinct signals. This telegraph was introduced into England in 1795, and has performed much valuable service for the government and commerce. In searching for facts upon this subject in the British Museum in London, some years since, I found the above drawings. They represent their erection close to the earth, as was the case some half a century ago. High hills were then chosen, and upon them a rude structure was placed, as seen in fig. 2.

THE GONON IMPROVEMENT OF THE SEMAPHORE TELEGRAPH.

This improvement is composed of two columns, one of which is 33 feet, and the other 28 feet high. To each of these two columns are fitted two moveable arrows. Between these four arrows the distance is nine feet, which space is filled with six windows or openings, arranged so as to be opened and closed at pleasure. There are four dial plates with a crank corresponding to the four arrows, and six keys corresponding to the six sashes or openings. With this simple mechanism the operator can from his room move the arrows, shut and open the sashes, and form 40,960 signals, which Mr. Gonon found was all that would be wanted for a general correspondence. By adding two fixed lights to each of the sashes, and two moveable lights to each of the arrows, Mr. Gonon said he could, after some little preparation, operate his machine as a night telegraph, the signals being exactly the same.

ABRAHAM CHAPPE'S IMPROVEMENT ON THE ORIGINAL SEMAPHORE.

More recently Mr. Abraham Chappé proposed an improvement on the system first erected, which he described in substance, as follows:

Fig. 4.

Fig. 5.

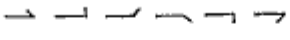

"In my new system of numeration and combination of signals, all the official signals are given on the horizontal line as represented in fig. 4. During the entire dispatch the indicator alone moves. Each indicator, in describing its circle, stops as heretofore described at the six positions, marked in fig. 4, that is, 5, 10, and 15 sky; 5,

Fig. 6.

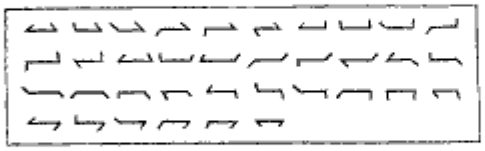

10, and 15 earth. Each angle of fig. 5, of an indicator, signifies a single number, and each corresponding angle of the opposite indicator represents the same number. The closed alone represent nothing.

"Inclosing the left indicator and opening successively the right indicator under its six angles, I shall have in the same order the number 1, 2, 3, 4, 5, and 6, by the signals represented in fig. 5. In developing both indicators at once, I shall obtain 36 combinations of two figures each, as seen in fig. 6. The numbers given by these 36 combinations are 216 series, and combining signals sufficient to represent 58,190 more than was used by the older system."

GUYOT'S IMPROVEMENT OF THE SEMAPHORE TELEGRAPH.

Fig. 7.

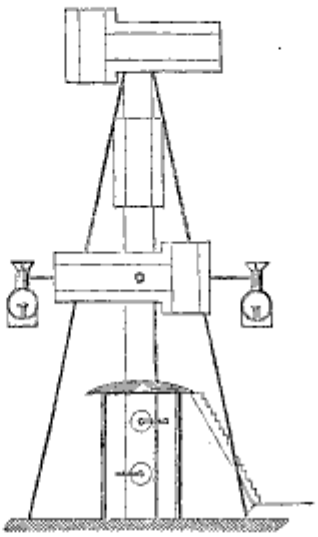

Mr. Jules Guyot proposed an improvement which is thus described. At distances of two to three miles a post was fixed about 30 feet high, strongly fastened at the foot. The upper extremities were stayed by guys of four iron cords. A station-house, some eight feet square at the foot, was erected for manipulating. The posts were fitted with ladder pins, by which they could be ascended at pleasure. Each pole, or mast, bore near its upper end a fixed axis parallel to the line, upon which a needle or indicator turned in a vertical plane. Fifteen feet lower was a second and a similar axis and indicator, and between these two axes was a moveable piece or regulator which could raise as high as the upper axis, or descend to the lower one.

They were about nine feet long, and about three feet wide at the smaller end, and about four feet at the widest end. They were constrncted with slats as the window blind, painted a heavy black through the centre, and white on the lateral bands. This ingenious contrivance of Mr. Guyot's was never practically established, but it unquestionably possessed very great merit.

The night telegraph, proposed by Mr. Guyot, was constructed with two liquid hydrogen lanterns, suspended at the

Fig. 8.

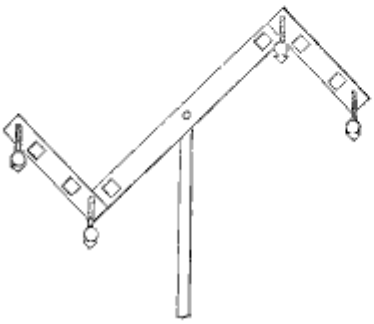

lower indicator of the day telegraph, so as to give a light in both directions. He also proposed to use lanterns on the Chappé telegraph, by placing two white lights at each extremity of the regulator, and two bright green lights at the extremity of the indicators. By means of an arrangement of these lights the Chappé telegraph was made to serve for the night. Fig. 8 represents the signals on the right oblique indicating signals 10 earth, and 10 sky, and in which all the lanterns are outside of the mechanism, illustrating the day telegraph transformed into the night.

Fig 9.

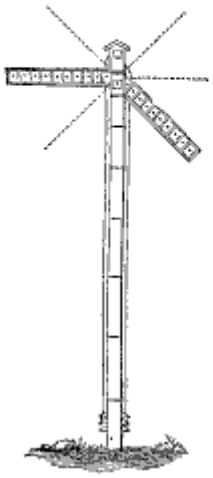

THE TREUTLER IMPROVEMENT IN SEMAPHORE TELEGRAPHING.

Mr. Treutler, of Berlin, constructed a semaphore telegraph to be used principally in the railway service. Fig. 9 represents the whole mechanism invented by him. It was a mast with a single pair of wings. These moveable wings were furnished with two series of mirrors as represented in fig. 10, designed to reflect the parallel to the line, and in two opposite directions.
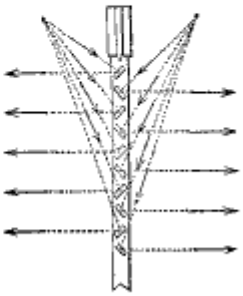
Fig. 10.